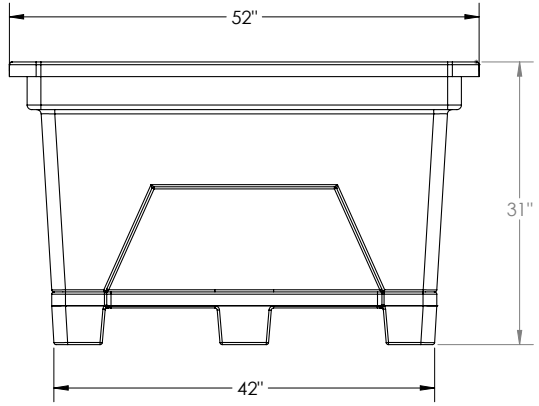

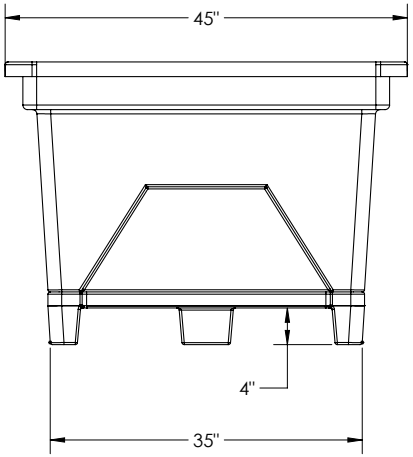

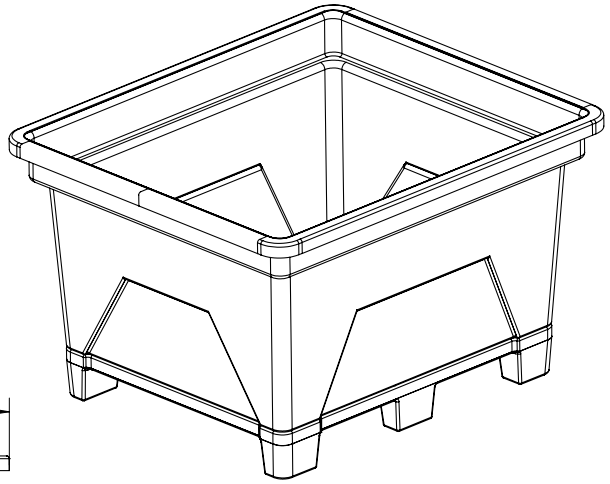

UNLESS OTHERWISE SPECIFIED:
DIMENSIONS ARE IN INCHES
TOLERANCES:
LINEAR ± 0.01 IN/IN
WARP ± 0.02 IN/IN
RADI ± 15%
ANGULAR ± 4.0°
WALL THICK ± 20%

INTERPRET GEOMETRIC TOLERANCING PER:

MATERIAL
POLYETHYLENE

FINISH

DO NOT SCALE DRAWING

	NAME	DATE
DRAWN	BWK	10/14/13
CHECKED		
ENG APPR.		
MFG APPR.		
Q.A.		

COMMENTS:

TITLE:

SP-160F

SIZE	DWG. NO.	REV
B	2099	C

SCALE: 1:1 WEIGHT: SHEET 1 OF 1

PROPRIETARY AND CONFIDENTIAL

THE INFORMATION CONTAINED IN THIS DRAWING IS THE SOLE PROPERTY OF SmaK PLASTICS INC. ANY REPRODUCTION IN PART OR AS A WHOLE WITHOUT THE WRITTEN PERMISSION OF SmaK PLASTICS INC IS PROHIBITED.

This document contains proprietary information. It is intended solely for use of potential clients involved or to be involved in a transaction with BARR Plastics Inc.

© 2019 BARR PLASTICS INC