PROPRIETARY DATA

PROPERTY OF ACE ROTO-MOLD MFG., INC. INFORMATION FURNISHED HEREIN IS THE PROPERTY OF ACE ROTO-MOLD MFG., INC.AND SHALL NOT BE USED, DISCLOSED TO OTHERS, OR COPIED WITHOUT THE EXPRESSED WRITTEN CONSENT OF ACE ROTO-MOLD MFG., INC. ALL RIGHTS RESERVED.

OP0360-48 C

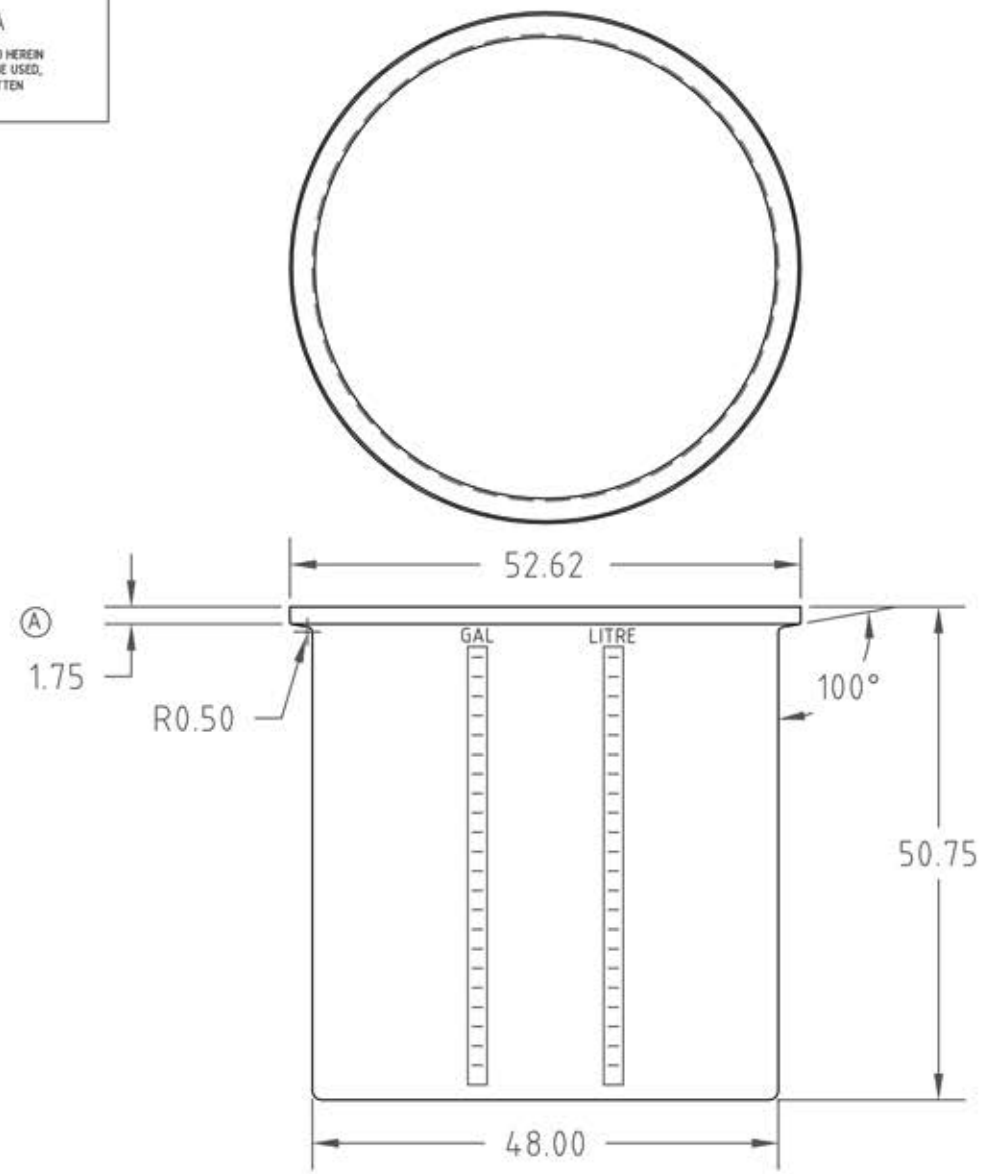

REV	DESCRIPTION	DATE	APPRD	CCN
C	WEIGHT WAS 84	8/19/08	DHJ	CCN1675
B	WAS OP0360-46 CCN 1408	8/1/07	REH	
A	TOP LID WAS 1" NOW 1.75"	1/31/05		

DRAWN / DATE DHJ/6/2/03

APPRD. / DATE ADH 11/14/07

MATERIAL

HDPE OR EQUIVALENT
REFERENCE MATERIAL DATA SHEET
FOR SPECIFIC PROPERTIES.

ACE ROTO-MOLD
A DIVISION OF DEN HARTOG INDUSTRIES, INC.
4010 HOSPERS DRIVE SOUTH, BOX 425, HOSPERS, IA 51238

CLIENT / DESCRIPTION

360 GALLON OPEN TOP TANK

ALL DIMENSIONS ARE IN DECIMAL INCHES
TOLERANCES UNLESS OTHERWISE SPECIFIED
± 1% @ 68° F

THIRD ANGLE PROJECTION
ANSI 14.5M

NOTES:

1. .25 NOM. WALL
2. SHOT WEIGHT 115 LBS. C

SCALE N.S.

PART NO. OP0360-48 B

This document contains proprietary information. It is intended solely for use of potential clients involved or to be involved in a transaction with BARR Plastics © Inc. Such proprietary information may not be used, reproduced, or disclosed for any other purpose without the expressed written permission.

2026 BARR PLASTICS INC