PROPRIETARY DATA

PROPERTY OF ACE ROTO-MOLD MFG., INC. INFORMATION FURNISHED HEREIN IS THE PROPERTY OF ACE ROTO-MOLD MFG, INC AND SHALL NOT BE USED, DISCLOSED TO OTHERS, OR COPIED WITHOUT THE EXPRESSED WRITTEN CONSENT OF ACE ROTO-MOLD MFG., INC. ALL RIGHTS RESERVED.

FS0165-32

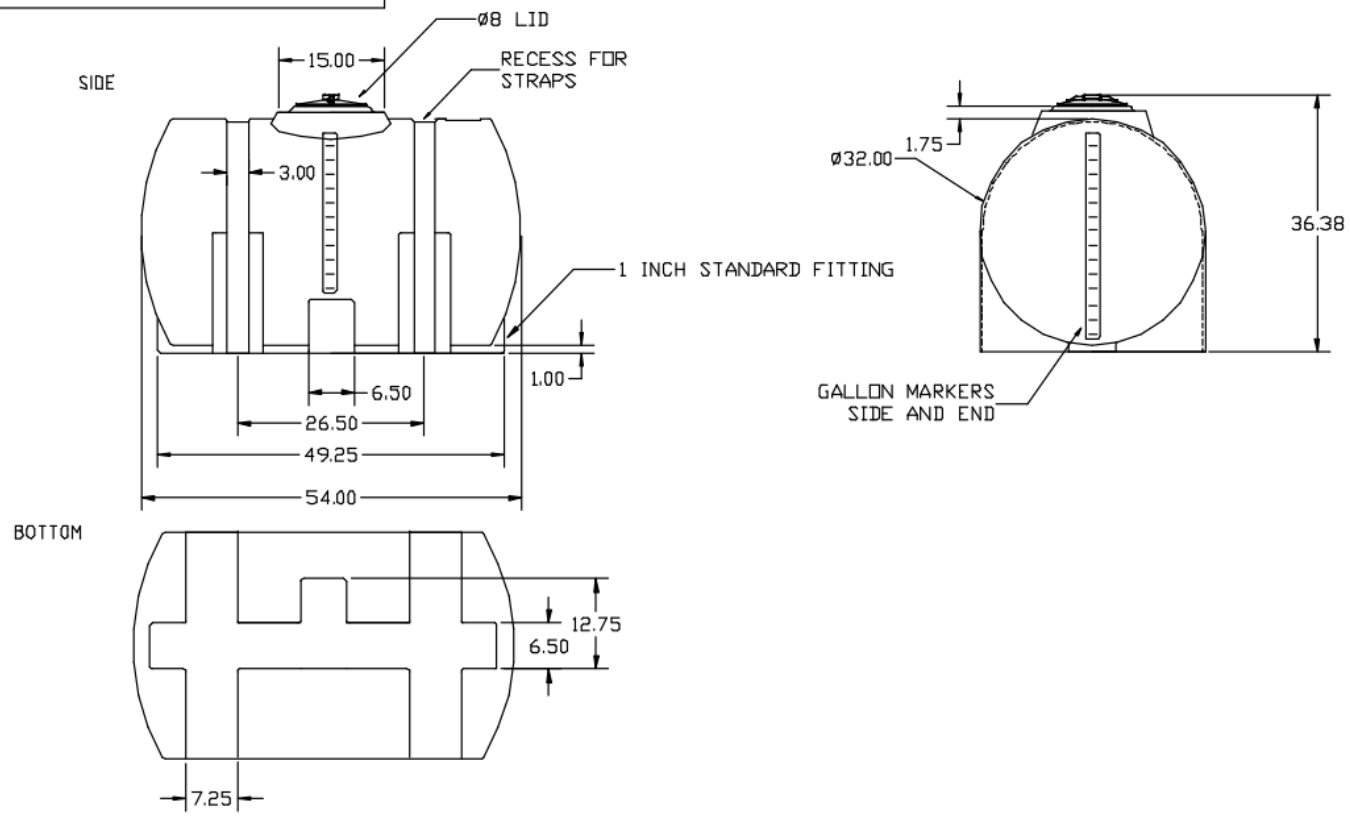

REV	DESCRIPTION	DATE	APPRD

ALL DIMENSIONS ARE IN DECIMAL INCHES
TOLERANCES UNLESS OTHERWISE SPECIFIED
± 1% @ 68° F

DRAWN / DATE: NVE 6/9/05

APPRD. / DATE: DHJ 6/21/05

THIRD ANGLE PROJECTION ANSI Y14.5M

MATERIAL

NOBIL 134 HDPE OR EQUIVALENT
REFERENCE MATERIAL DATA SHEET FOR SPECIFIC PROPERTIES.

NOTES:
1. NOM. WALL @ .201
2. WHITE OR COLOR
3. SHOT WEIGHT 71 LBS.

Ace Roto-Mold
A DIVISION OF DEE HARTOG INDUSTRIES, INC.
4018 HWY. 60 BLVD., BOX 421, HOSPERS, IOWA 51238

CLIENT / DESCRIPTION: 165 GALLON CAPACITY FREE STANDING LEG TANK

SCALE: N.S.

PART NO.: FS0165-32

This document contains proprietary information. It is intended solely for use of potential clients involved or to be involved in a transaction with BARR Plastics Inc. Such proprietary information may not be used, reproduced, or disclosed for any other purpose without the expressed written permission.

© 2019 BARR PLASTICS INC