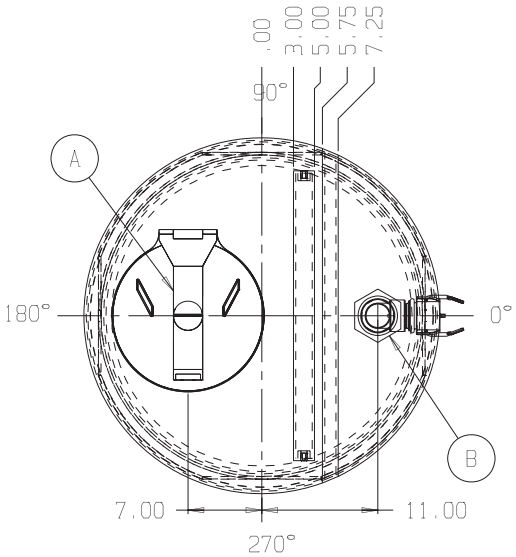

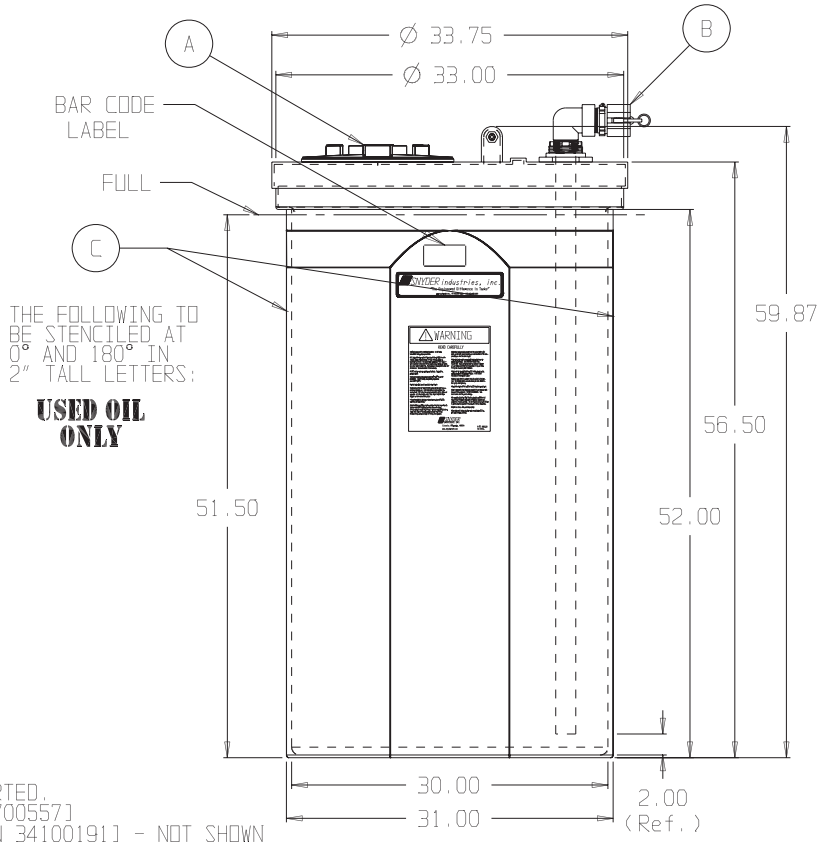

SNYDER INDUSTRIES INC.

NOTE:
ALL EXTERNAL PIPING MUST BE INDEPENDENTLY SUPPORTED.
A. ASM MANWAY HINGED PP 12IN HYPRO/ARAG [P/N 34700557]
A. STRAINER BASKET 12" PP HYPRO/ARAG#300330 [P/N 34100191] - NOT SHOWN
B. FITTING PE 2IN BH TXT EPDM BJO [P/N 34300119]
B. ASM DRAWTUBE PP EPDM 120-500 DCT [P/N 34700332]
C. INK BLACK STENCIL MARSH ROLLMARK [P/N 99200011]

* BASE FITTINGS TO BE LEFT INSTALLED AT TIME OF SHIPMENT PER SII PROCEDURE
* Consult Snyder's Guidelines for Use and Installation prior to delivery.
Available on-line at www.snydernet.com

(all dimensions in inches)

TANK ASSEMBLY #: 1000400N89102 (L)
PRIMARY #: 5710000N95701 (L)
HDLPE/BLK/1.9 SG.
CONTAINMENT #: 1000400N89101 (L)
HDLPE/YW/1.9 SG.
REF#: 00000 01/15/09

150 GALLON USED OIL COLLECTION TANK SYSTEM

This document contains proprietary information. It is intended solely for use of potential clients involved or to be involved in a transaction with BARR Plastics Inc. Such proprietary information may not be used, reproduced, or disclosed for any other purpose without the expressed written permission.

© 2019 BARR PLASTICS INC