© DEN HARTOG INDUSTRIES, INC.

Copyright. All information furnished within this document, electronic file or design correspondence is the property of Den Hartog Industries, Inc and shall not be used, disclosed to others or copied without the expressed written consent of Den Hartog Industries, Inc.

ITEM NO.	PART NUMBER	DESCRIPTION	QTY.
1	CB023-15ST-1	TANK SUPPORT STRAP	4
2	CB023-15ST-2	BASE STRAP	4
3	CB023-15ST-3	LOW SUPPORT	4
4	RAR-12	ROLLED ANGLE, 12" PLAIN	1
5	CB023-15ST-5	SIDE TUBE	4
6	CB023-15ST-6	LEG TUBE	4
7	12583	1" PIPE PLUG	4

CB023-15ST

A

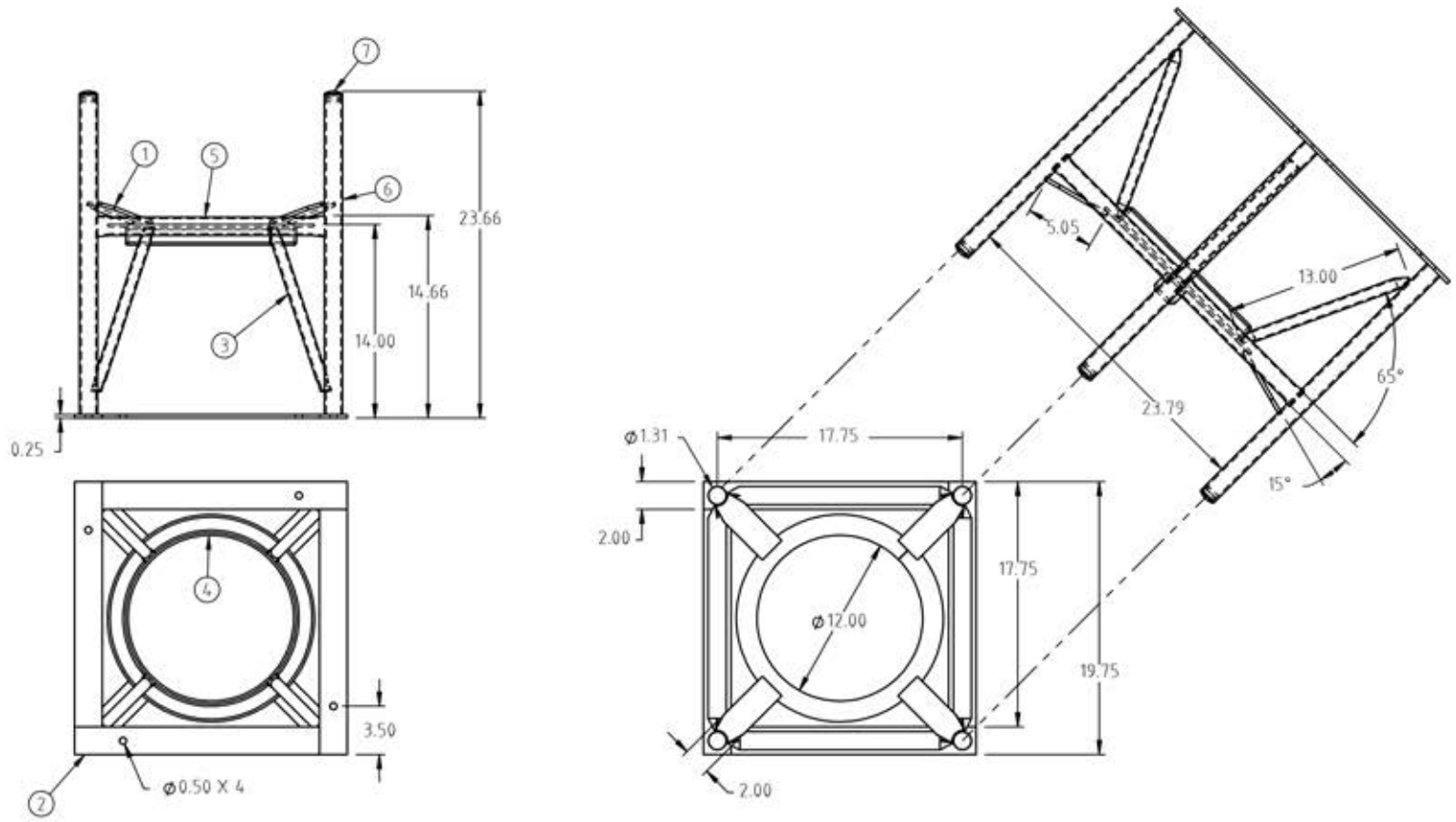

REV.	DESCRIPTION	BY	DATE	CCN
A	UPDATED SHEET FORMAT	SRA	7/20/2023	4447

ALL DIMENSIONS ARE IN DECIMAL INCHES
TOLERANCES UNLESS OTHERWISE SPECIFIED

POLYETHYLENE: ±1% @ 68° F

METAL: DECIMAL ± .125" FRACTION ± 1/4" ANGLE ± 1°

THIRD ANGLE PROJECTION ANSI 14.5M

(A)

DRAWN / DATE: ADH 1/3/2011

APPRD. / DATE: REH 8/24/2011

SHOT WEIGHT:

SHIPPING WEIGHT: 37.00 LBS

FINISH: Powder Coat

MATERIAL: SEE COMPONENTS

NOTES:

Den Hartog INDUSTRIES, INC.
Ace Roto-Mold • Injection Molding • Blow Molding • Sowjoy
4010 HOSPERS DRIVE S. BOX 425, HOSPERS, IOWA 51238-0425

DESCRIPTION: CB, STAND 23" DIA 15 DEG

SCALE: N.S.

PART NO.: CB023-15ST

SHEET: 1 OF 1

This document contains proprietary information. It is intended solely for use of potential clients involved or to be involved in a transaction with BARR Plastics © Inc. Such proprietary information may not be used, reproduced, or disclosed for any other purpose without the expressed written permission.

2026 BARR PLASTICS INC