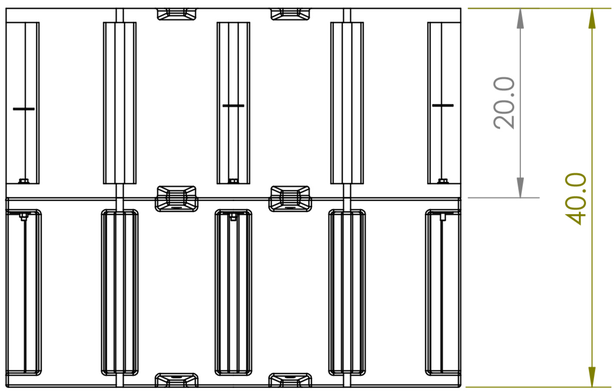

FRONT VIEW

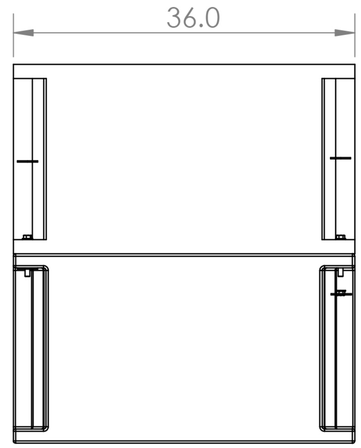

END VIEW

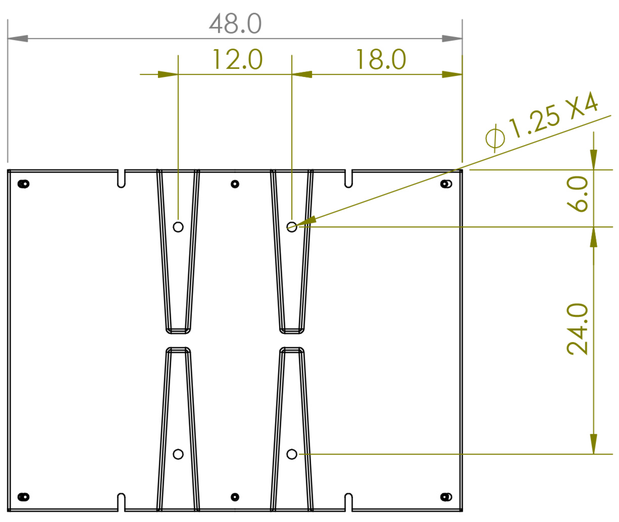

BOTTOM VIEW

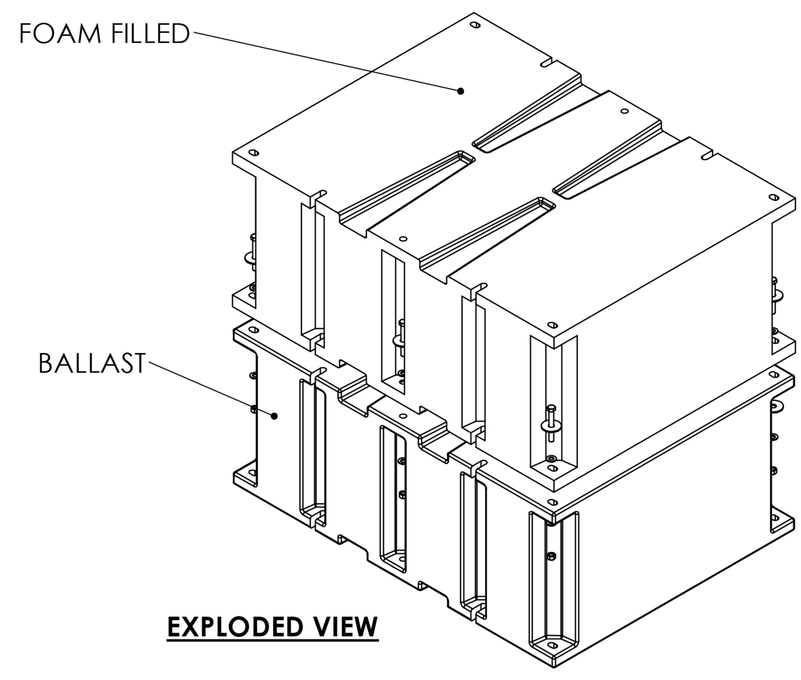

EXPLODED VIEW

BARR 1.800.665.4499 barrplastics.com	Customer Approval Date: Sign Here:	Reference Document:	MATERIAL & DENSITY: LLDPE 58.5 lb/ft^3 (0.937 g/cm^3)	UNLESS OTHERWISE SPECIFIED: DIMENSIONAL TOLERANCES (inches): ROTO MOLDED 0-3" +/- .125" >3"-12" +/- .1875" >12"-24" +/- .25" >24"-48" +/- .5" >48"-96" +/-.75" >96"-144" +/- 1.25"		NAME	DATE	
		NOTE: Product dimensions and tolerances shown are based on ambient environmental conditions (temperature, relative humidity) and may vary when exposed to changing environmental conditions.	MELT INDEX: (190° C/2.16kg) MINIMUM: 5.0 g/10 min		DRAWN	SM	4/26/23	TITLE: WAVE DEFENDER 3420 SYSTEM
			COLOR: CARBON BLACK		CHECKED	X	X	
					ENG APPR.			SIZE L / DWG. NO. WD3420 / REV A
					MFG APPR.			
					Q.A.			
		DO NOT SCALE DRAWING	WALL THICKNESS: .20" (MINIMUM)		Dimensions: Decimal Inches (u.n.o.)			NOT TO SCALE / SHEET 1 OF 1

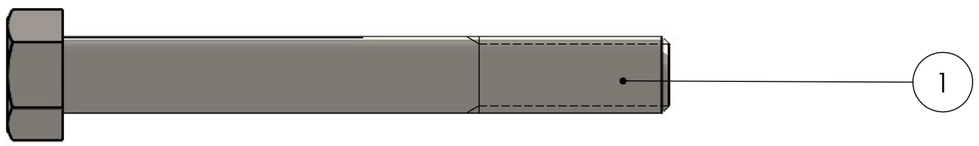

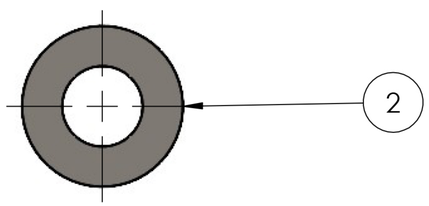

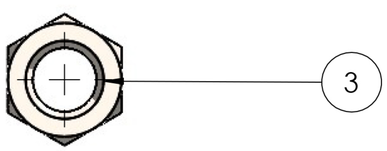

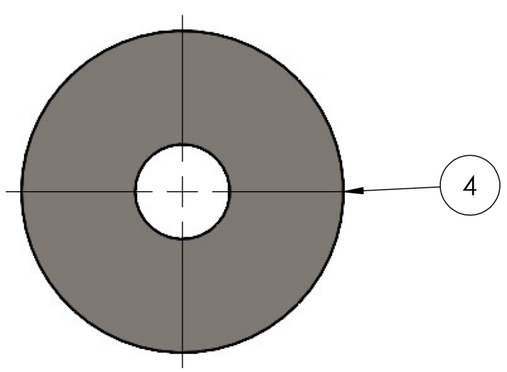

ITEM NO.	DESCRITPION	QTY.
1	1/2"-13 x 4" Long Stainless Steel Hex Cap Bolt	6
2	1" OD Stainless Steel Flat Washer for 1/2" Bolt	12
3	1/2"-13 Stainless Steel Hex Nut	6
4	2" OD fender Washer for 1/2" Bolt	12

BOLTED IN 6 LOCATIONS
ALL 4 CORNERS AND
MIDDLE MOUNTING LOCATIONS

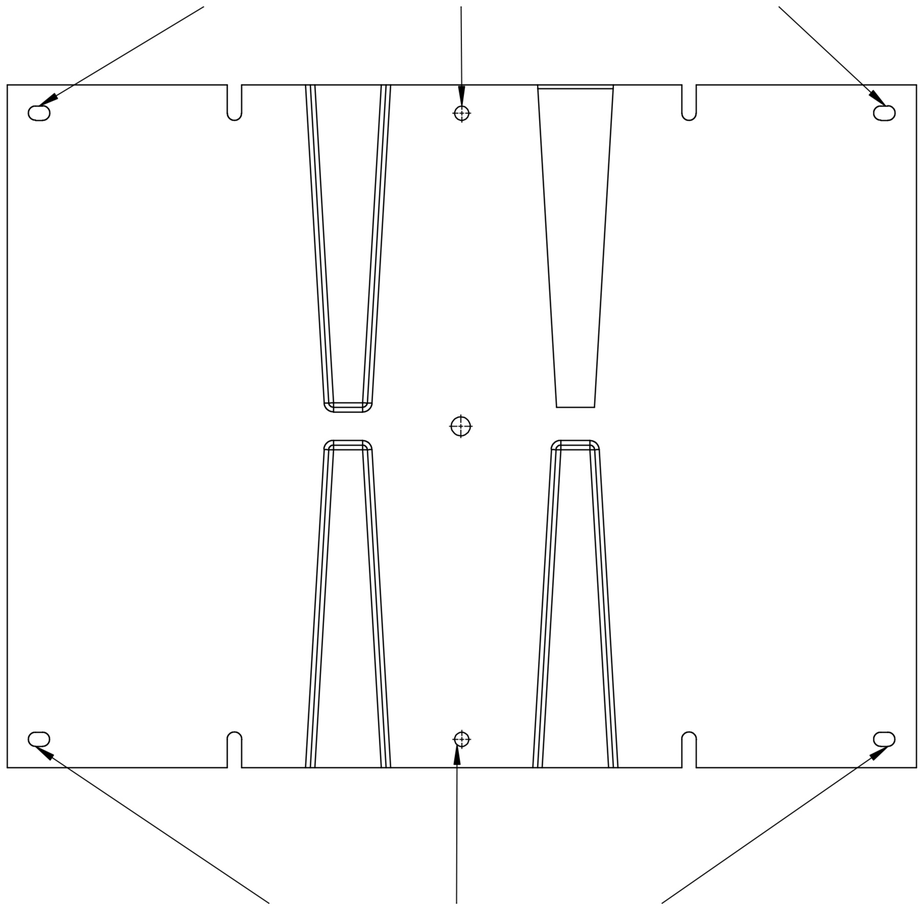

STEP 1

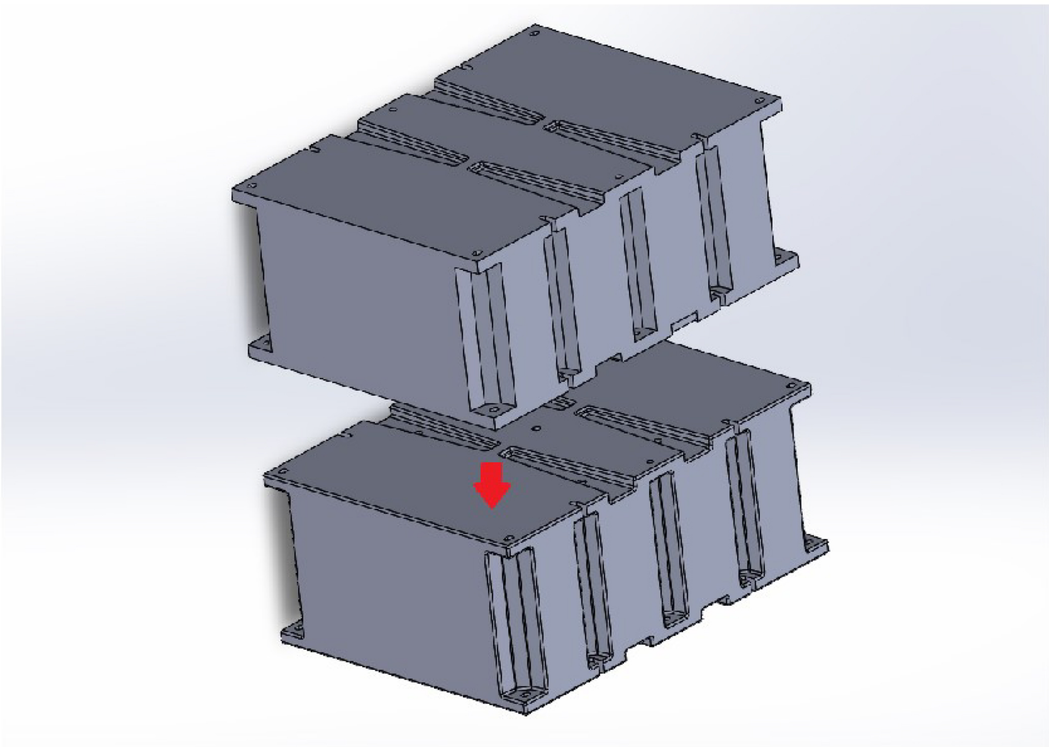

STACK FOAM FILLED FLOAT ON TOP OF BALLAST FLOAT
BALLAST FLOAT SHOULD HAVE 5 VENT HOLES ON THE TOP SIDE AND 4 ON THE BOTTOM

STEP 2

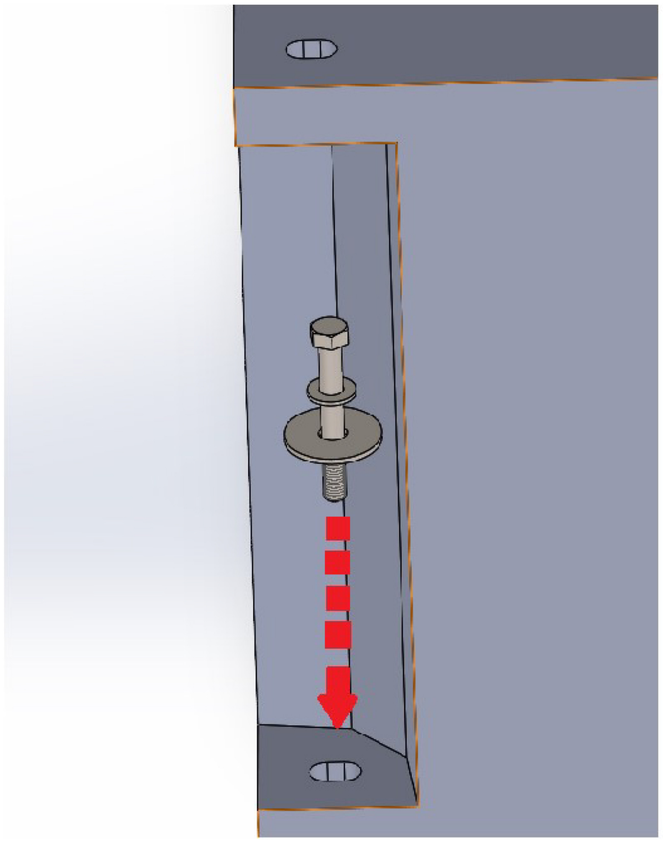

INSERT BOLT THROUGH WASHERS AS SHOWN AND THROUGH BOTH MOUNTING FLANGES OF FLOAT ASSEMBLY

STEP 3

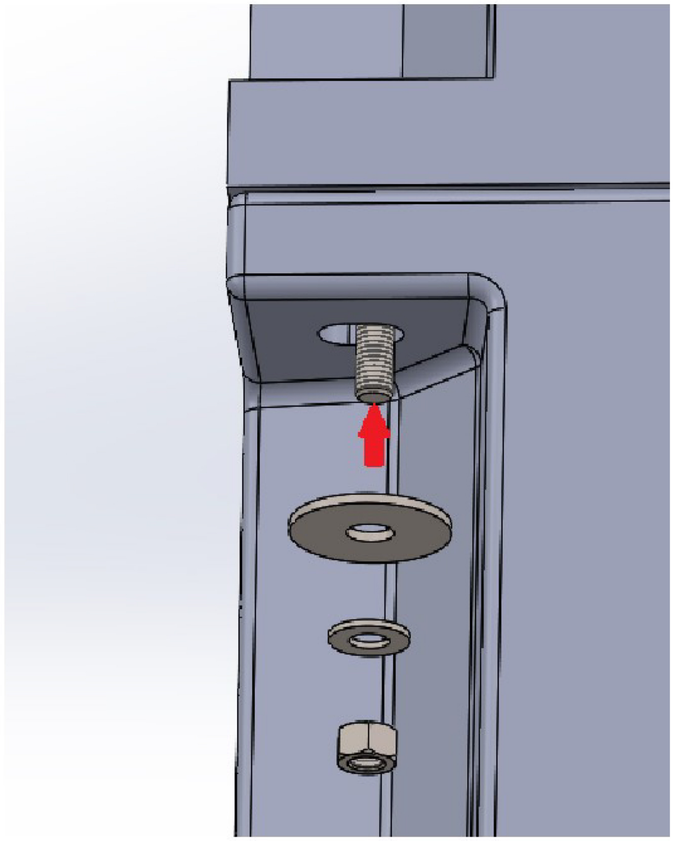

PLACE WASHERS OVER BOTTOM OF BOLT AS SHOWN AND TIGHTEN UNTIL SNUG
CAUTION: DO NOT OVERTIGHTEN. DEFORMATION OF MOUNTING FLAGE WILL OCCUR , DAMAGING FLOAT.
REPREAT PROCESS FOR ALL 6 LOCATIONS