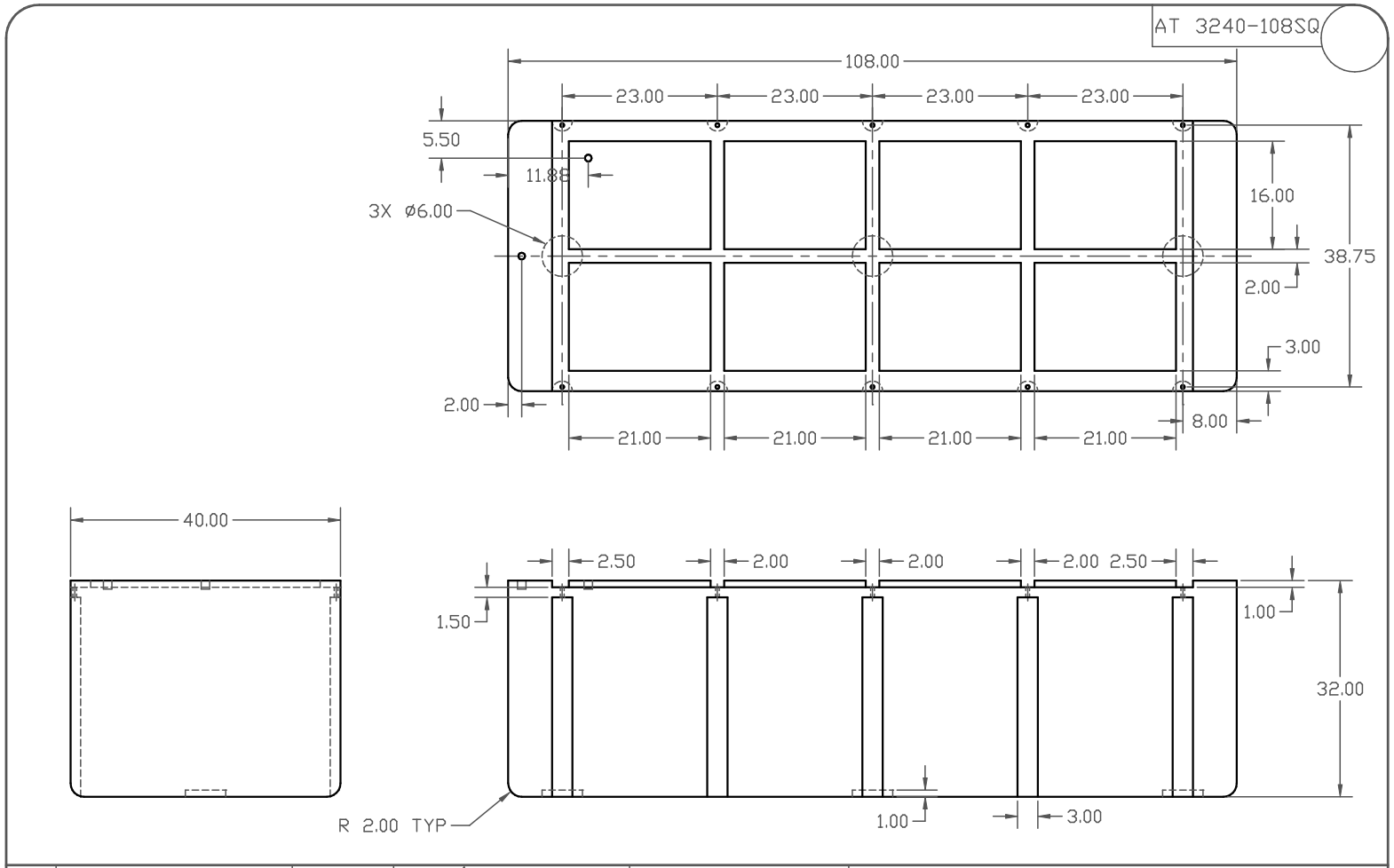

			DRAWN /DATE DHJ/ 3/13/03	MATERIAL / SHOT WEIGHT	BARR PLASTICS FLOATS
A	ADD BUOYANCY	8/27/03	APPRD. /DATE	BLACK 230LBS. .375 WALL	
REV	DESCRIPTION	DATE APPRD.			CLIENT / DESCRIPTION
ALL DIMENSIONS ARE IN DECIMAL INCHES TOLERANCES UNLESS OTHERWISE SPECIFIED ±1% @ 68° F			THIRD ANGLE PROJECTION ANSI 14.5M	NOTES: APPROXIMATE BUOYANCY 4500 LBS.	BOAT LIFT AIR TANK
					SCALE NONE / PART NO. AT 3240-108SQ

This document contains proprietary information. It is intended solely for use of potential clients involved or to be involved in a transaction with BARR Plastics Inc.

© 2019 BARR PLASTICS INC