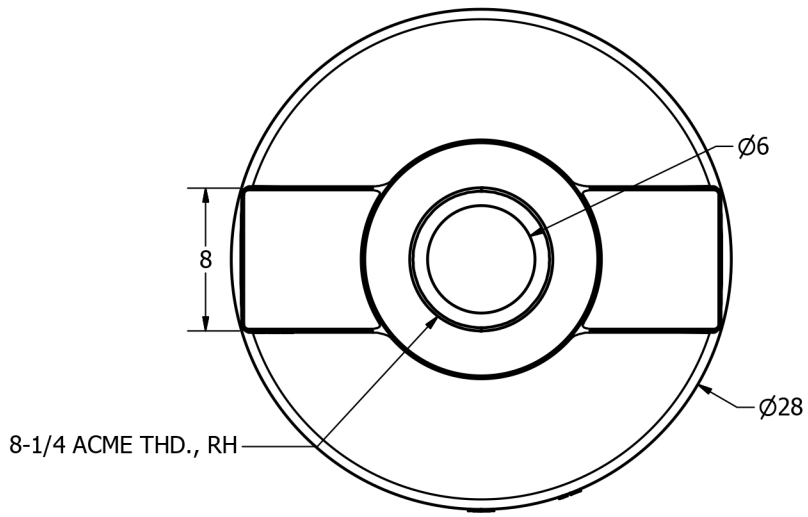

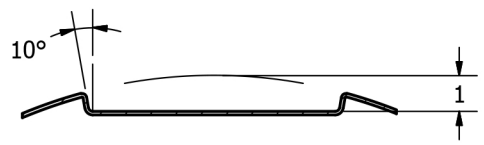

SECTION A-A
SCALE 1:4

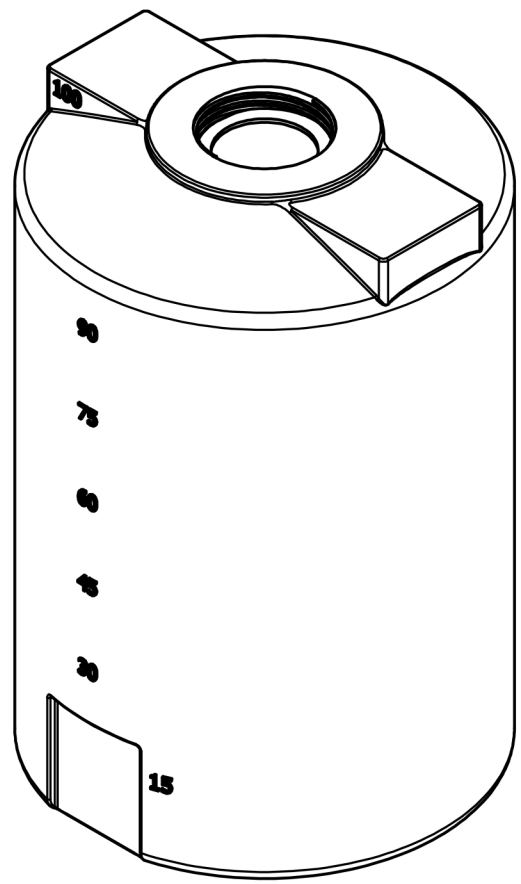

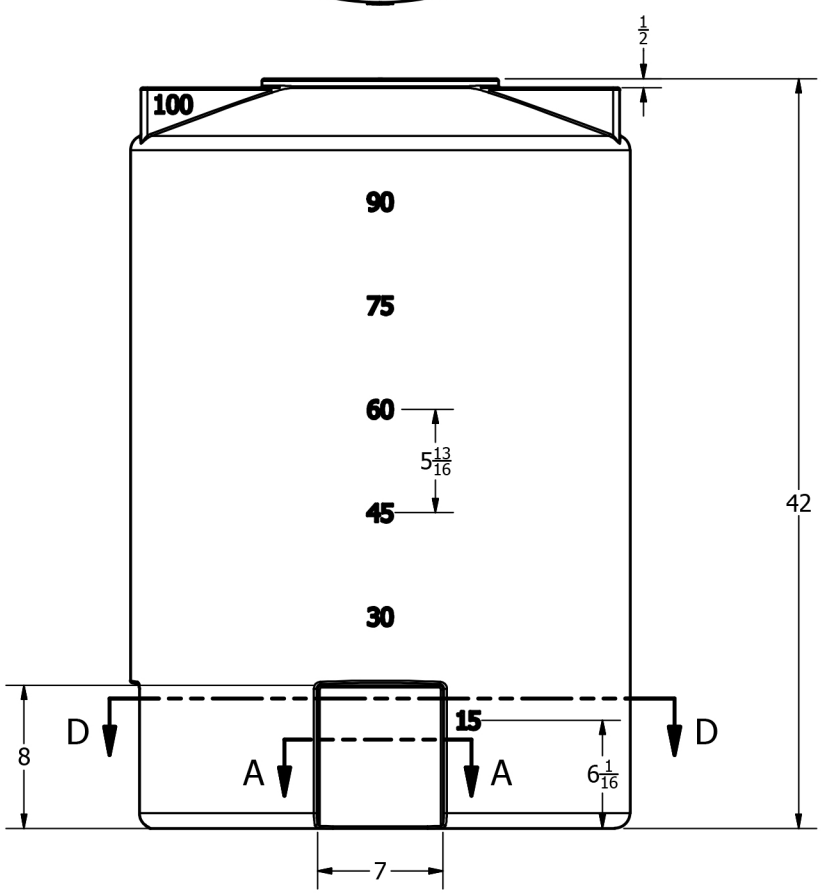

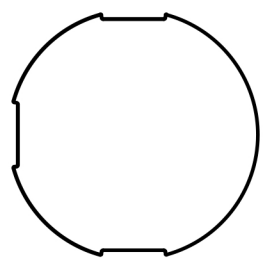

SECTION D-D
SCALE 1:16

REVISION HISTORY			
REV	DESCRIPTION	DATE	AUTHOR
A	REDRAWN	7/1/2013	Michael Holden

DRAWN Jerry Paulson	6/6/2003	NORWESCO NORWESCO, INC. SAINT BONIFACIUS, MN
CHECKED		TITLE 100 GALLON VERTICAL TANK X 28 DIAMETER
QA		
MFG		
APPROVED		SIZE B / DWG NO / REV A
		SCALE: 1/16 / SHEET 1 OF 1

This document contains proprietary information. It is intended solely for use of potential clients involved or to be involved in a transaction with BARR Plastics © Inc. Such proprietary information may not be used, reproduced, or disclosed for any other purpose without the expressed written permission.

2026 BARR PLASTICS INC