NORWESCO
ST. BONIFACIUS, MN

REV

725 USG (2744 LTRS)
HORIZONTAL LEG TANK

WT. (LBS)	DWG NO.
199.6	**40180** W/2" FTG.
198.4	**40196** W/O FTG.

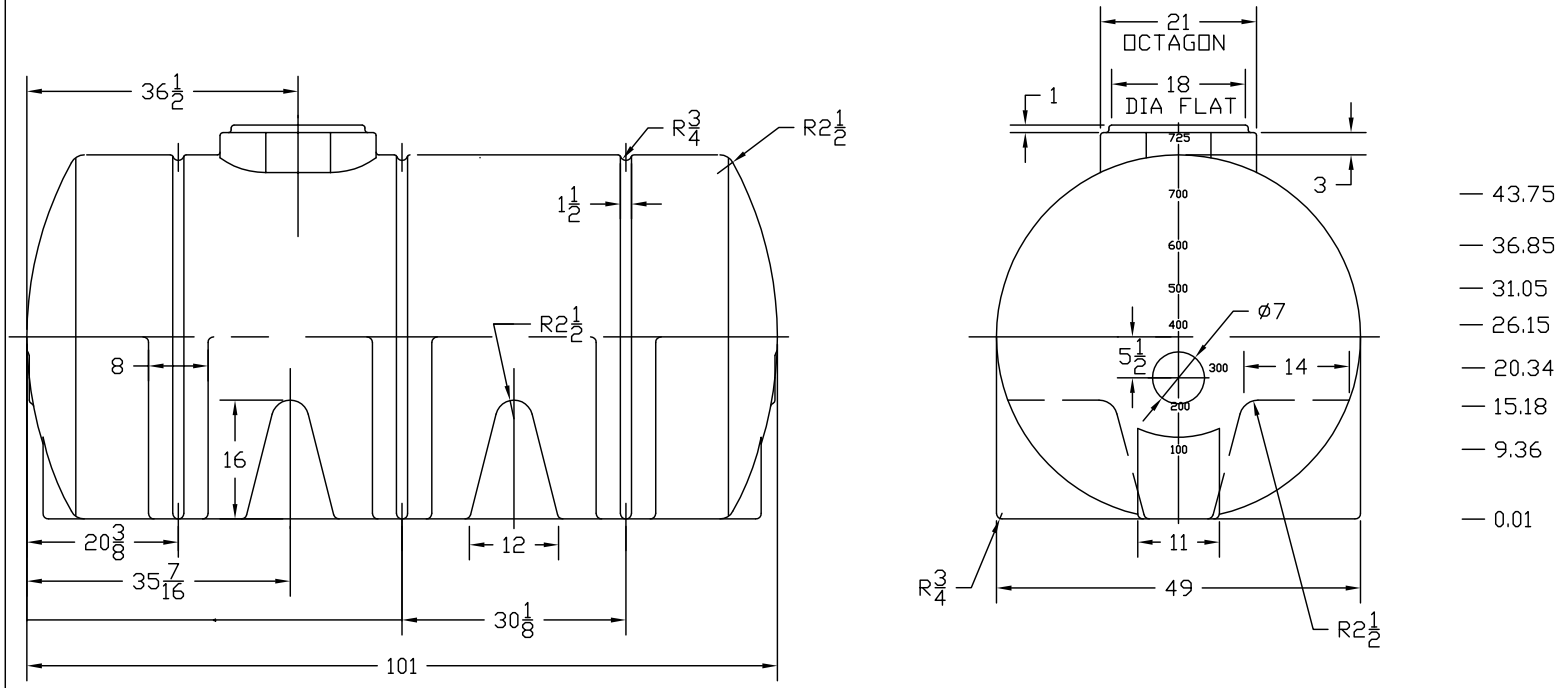

FOB GRIFFIN, GA & LANCASTER, OH GALLON MARKS ONE END

ALL INFORMATION CONTAINED IN THIS DRAWING IS STRICTLY CONFIDENTIAL AND PROPERTY OF BARR PLASTICS INC. NO PART SHALL BE COPIED OR REPRODUCED WITHOUT THE WRITTEN CONSENT OF BARR PLASTICS INC.

Customer Drawing Approval

Customer _____

Barr Plastic Inc. _____

BARR Plastics Inc.

DATE: 09 SEP 05

PROJECT: – TANK APPROVAL DWG

CLIENT: –

DRAWING REF:

SCALE: –

REV:

MATERIAL SPECIFICATIONS

HDPE 1.5 SPG

ALL FITTINGS ARE POLYPROPYLENE WITH EPDM GASKETS

This document contains proprietary information. It is intended solely for use of potential clients involved or to be involved in a transaction with BARR Plastics Inc. Such proprietary information may not be used, reproduced, or disclosed for any other purpose without the expressed written permission.

© 2019 BARR PLASTICS INC